POWER DOOR LOCKS

CONTENTS

page

POWER DOOR LOCKS 1
REMOTE KEYLESS ENTRY 4

POWER DOOR LOCKS

INDEX

page

GENERAL INFORMATION
INTRODUCTION 1
DESCRIPTION AND OPERATION
CHILD PROTECTION LOCK 2
DOOR LOCK INHIBIT 2
KEYLESS ENTRY SYSTEM 2
POWER DOOR LOCKS 1
DIAGNOSIS AND TESTING
AUTOMATIC DOOR LOCK SYSTEM 2
DOOR LOCK MOTOR 2
DOOR LOCK SWITCH 2
DOOR LOCK SYSTEM 3
TRUNK LID 3
VOLTAGE 3
REMOVAL AND INSTALLATION
DOOR LOCK MOTOR/LATCH 3
TRUNK LID SOLENOID 3
ADJUSTMENTS
TRUNK LID 3

GENERAL INFORMATION

INTRODUCTION

All doors can be locked or unlocked electrically by operating the switch on either front door panels. When the door lock switch is activated the Body Control Module actuates the door lock relay.

All doors can be locked or unlocked mechanically and independently with their respective locking knobs.

The right and left front door can be locked or unlocked mechanically from the outside with the key. The front doors can also be unlocked by actuation of the inside remote door handle.

The deck lid can be unlatched by either depressing the push switch from inside the car, manually by key from outside or by depressing the remote keyless entry deck lid release button two times..

DESCRIPTION AND OPERATION

POWER DOOR LOCKS

The Body Control Module (BCM) actuates the power door lock relays when a door lock switch is activated. If the door lock switch is pressed for longer than eight consecutive seconds, the BCM will de-energize the door lock relay.

The system includes an Automatic Door Locking feature. **The vehicle is built with the system disabled.** When the system is disabled the door locks will work by use of the door lock switches and the Remote Keyless Entry System only. When the Automatic Door Lock System is enabled the BCM will automatically lock all the doors when all of the conditions below are met:

- All doors are closed
- The vehicle speed exceeds 15 ± 1 mph
- The throttle position sensor tip-in is greater than 10 ± 2 degrees

The scan tool (DRB) is used to enable/disable the automatic door lock system. Refer to the proper Body Diagnostic Procedures Manual for the procedure.

The Body Control Module will automatically re-lock all doors if the above conditions are met and if any of the doors become ajar and then closes again.

The power lock motors are also equipped with a thermal protection system which prevents the motors from burning out. The motors may chatter if they are continuously activated.

DESCRIPTION AND OPERATION (Continued)

CHILD PROTECTION LOCK

The child protection locks are on the rear doors only. The lock when engage, will disable the inside door handle from opening the door. The lock is part of the latch/lock assembly. The lock is engaged by moving a lever that is located on the rearward inside edge of the door.

DOOR LOCK INHIBIT

With the key in the ignition switch and the driver's door open, the Body Control Module (BCM) will ignore the command to lock the power door locks. Once the key is removed, or the driver's door is closed, the BCM will allow the power door locks to lock.

KEYLESS ENTRY SYSTEM

The system allows locking and unlocking of vehicle door(s) and trunk lid by remote control using a hand held radio transmitter. The ignition switch must be OFF before the trunk lid can be unlatched with the transmitter.

The receiver may receive signals from two transmitters. Each transmitter has its own code and the code has been stored in memory. If the transmitter is replaced or a second transmitter is added, the code for both units has to be placed in memory.

DIAGNOSIS AND TESTING

AUTOMATIC DOOR LOCK SYSTEM

For complete testing of the automatic door lock systems, refer to the proper Body Diagnostics Manual.

DOOR LOCK MOTOR

Make certain battery is in normal condition before circuits are tested.

To determine which motor is faulty, check each individual door for electrical lock and unlock or disconnect the motor connectors one at a time, while operating the door lock switch. In the event that none of the motors work, the problem maybe caused by a shorted motor, a bad switch or a bad relay. Disconnecting a defective motor will allow the others to work.

To test an individual door lock motor, disconnect the electrical connector from the motor. To lock the door, connect a 12 volt power source to the positive pin of the lock motor and a ground wire to the other pin (Fig. 1). To unlock the door reverse the wire connections at the motor pin terminals. If these results are NOT obtained, replace the motor.

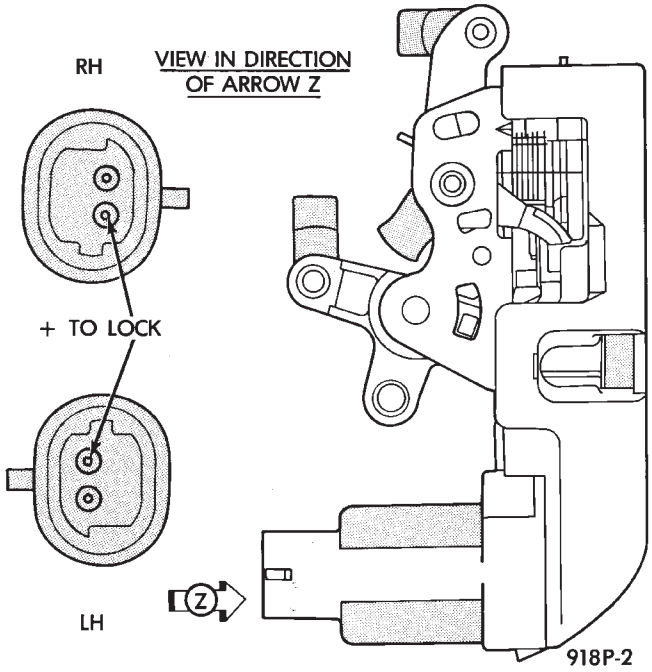

Fig. 1 Door Lock Motor/Latch

DOOR LOCK SWITCH

Remove the switch from its mounting location. Using an ohmmeter, refer to (Fig. 2) to determine if continuity is correct in the Lock and Unlock switch positions. If these results are not obtained, replace the switch.

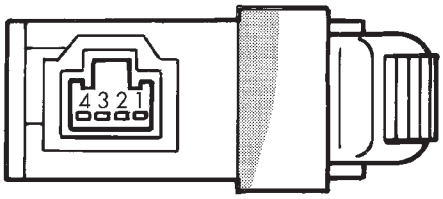

SWITCH POSITION	CONTINUITY BETWEEN	RESISTANCE VALUE
UNLOCK	1 and 4	2700 Ω ± 10%
LOCK	1 and 4	620 Ω ± 10%

958P-6

Fig. 2 Door Lock Switch Continuity Test

DOOR LOCK SYSTEM

For complete testing of the automatic door lock systems, refer to the proper Body Diagnostic Procedures Manual.

TRUNK LID

For vehicles equipped with electric trunk lid release.

DIAGNOSIS AND TESTING (Continued)

(1) Confirm solenoid lead wire is connected and 10 volts or more are available at solenoid.

(2) Provide proper ground through latch mounting screws.

(3) Remove latch and examine plunger. Plunger should spring back when pressed.

(4) Insure that solenoid plunger travel is adequate approximately 16 mm (5/8 inch).

VOLTAGE

The following wiring test sequence determines whether or not voltage is continuous through the body harness to switch.

(1) Remove left side switch from door trim panel.

(2) Carefully separate multiple terminal block on wiring harness from switch body.

(3) Connect one lead of test light to a ground terminal:

- Touch other test light lead to battery feed B+ terminal.
- If test light comes on, the wiring circuit between the battery and switch is functional.
- If test light does not come on, check fuse 13 in the Junction Block for a blown fuse. Refer to Group 8W, Wiring Diagrams for circuit information.

REMOVAL AND INSTALLATION

DOOR LOCK MOTOR/LATCH

REMOVAL

(1) Remove door trim panel, refer to Group 23, Body for removal procedures.

(2) Disconnect motor linkage at the latch/lock motor (Fig. 1).

(3) Disconnect motor wire connector.

(4) Remove latch/lock assembly attaching screws and remove assembly.

INSTALLATION

For installation, reverse the above procedures.

TRUNK LID SOLENOID

REMOVAL

(1) Raise trunk lid to the full up position.

(2) Remove latch cover attaching screws then remove cover.

(3) Remove two mounting solenoid screws and remote key cable retainers then remove solenoid.

INSTALLATION

For installation, reverse the above procedures.

ADJUSTMENTS

TRUNK LID

Adjust trunk lid latch and striker so that trunk lid latches with a moderate slam. With ignition switch in On or Accessory position, push trunk lid unlock switch. Should latch fail to lock or unlock replace latch assembly.

REMOTE KEYLESS ENTRY

INDEX

	page
DESCRIPTION AND OPERATION	
INTRODUCTION	4
DIAGNOSIS AND TESTING	
REMOTE KEYLESS ENTRY CONDITIONS	5
RKE SYSTEM	4
SERVICE PROCEDURES	
HORN CHIRP CANCELLATION	6
REMOVAL AND INSTALLATION	
REMOTE KEYLESS ENTRY MODULE	7
ADJUSTMENTS	
PROGRAM REMOTE KEYLESS ENTRY TRANSMITTER	7
SPECIFICATIONS	
TRANSMITTER BATTERY	7
TRANSMITTER CONTROL RANGE	7

DESCRIPTION AND OPERATION

INTRODUCTION

The system allows locking and unlocking of vehicle door(s) and trunk lid by remote control using a hand held radio frequency transmitter. The ignition switch must be OFF before the trunk lid can be unlatched with the transmitter.

The receiver may receive signals from two transmitters. Each transmitter has its own code, and the code is programmed and stored into receiver memory. If the transmitter is replaced or a second transmitter is added, the codes of both units have to be reprogrammed into the receiver memory. If a receiver module is replaced, the transmitter codes must be stored in the new receiver memory.

OPERATION

The transmitter has three buttons for operation (Fig. 1). They are LOCK, UNLOCK and TRUNK release.

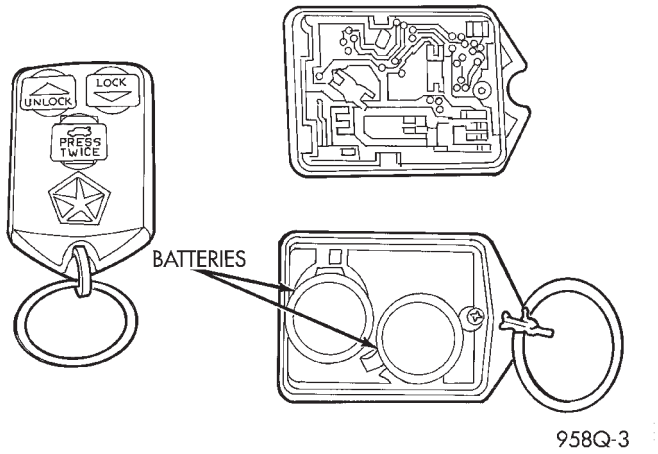

Fig. 1 Transmitter

- The UNLOCK button will unlock the driver's door and enable illuminated entry. Pushing and releasing the button once will unlock the driver's door. Pushing and releasing the button two times, within a five seconds interval, will unlock all doors.
- Upon pressing the LOCK button, the horn will sound a short CHIRP to notify that the all door lock signal was received and set.
- Pushing and releasing the TRUNK UNLOCK button two times, within a two second interval, will slightly ajar the trunk lid.

The receiver is capable of retaining Vehicle Access Code (VAC) even when power is removed.

Each Remote Keyless Entry (RKE) module must have at least one and no more than two transmitters.

DIAGNOSIS AND TESTING

RKE SYSTEM

When trouble shooting problems with the Remote Keyless Entry System, always verify that the power door lock/unlock switches are functional. If the doors do not lock/unlock with the power switches, the following modules should be analyzed:

- Lock/Unlock Switches
- Body Control Module
- Lock and unlock relays
- Door lock/unlock motors

Refer to (Fig. 2) for Block Wiring Diagram.

If the following modules do not work:

- Remote keyless entry system
- Radio/clock
- Body Control Module
- Door lock switches

A blown fuse is the probable cause. The remote keyless entry fuse 13 is located in the Junction Block. To check for a blown fuse, pull the fuse out slightly, but maintain contact between the fuse ter-

DIAGNOSIS AND TESTING (Continued)

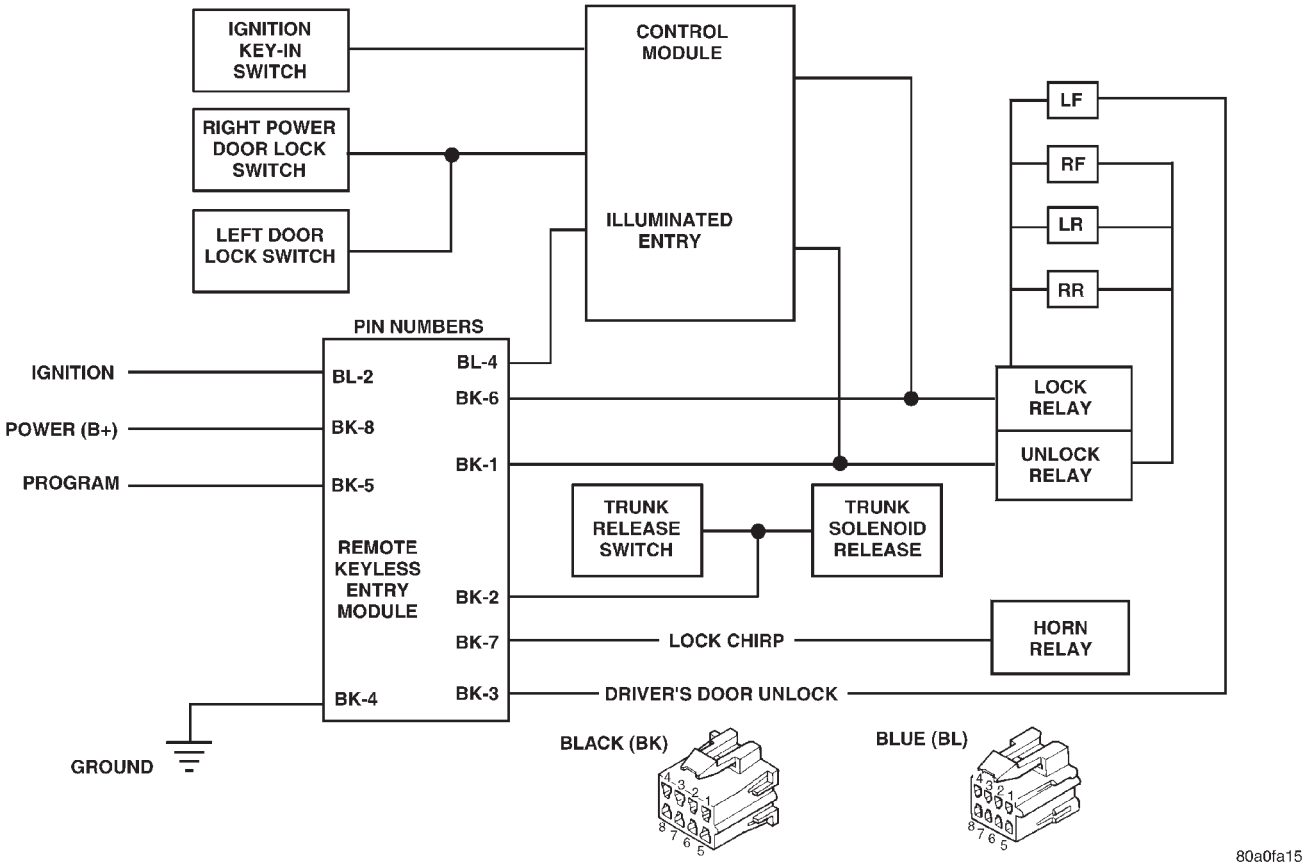

Fig. 2 Block Wiring Diagram

minals and the terminals in Junction Block. Using the voltmeter probe, check both terminals for 12 volts. If only one terminal measures battery voltage, the fuse is defective and must be replaced. If neither terminal measures battery voltage, check for an open or shorted circuit to the Junction Block, repair as needed. If battery voltage is still not available, check the high current fuse G in the Power Distribution Center, located in the engine compartment.

REMOTE KEYLESS ENTRY CONDITIONS

TRANSMITTER WILL NOT LOCK OR UNLOCK DOORS OR ACTIVATE THE TRUNK RELEASE LATCH

(1) Using a voltmeter, check Pin BK–8 for battery voltage and Pin BK–4 for ground of the RKE Module (Fig. 2) and (Fig. 3).

(2) If the RKE module has power and ground, check the voltage across each of the battery in the transmitter. If either or both batteries measure less than 3 Volts, replace the batteries.

(3) If the system still does not work, replace the transmitter and refer to Programing Remote Keyless Entry Transmitter.

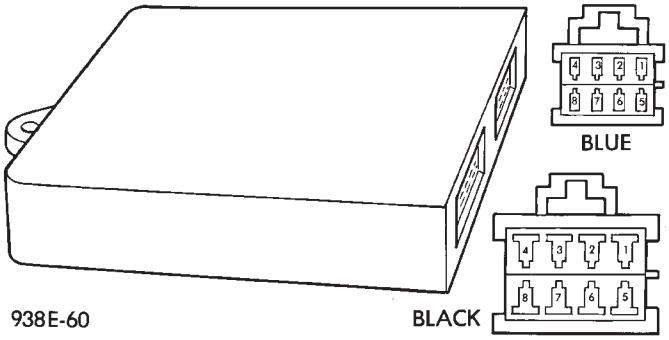

Fig. 3 Remote Keyless Entry Module

ALL DOORS WILL NOT UNLOCK WITH THE TRANSMITTER

(1) With the driver's door in the unlocked position. Using a voltmeter, check Pin BK–3 of the RKE module connector for a voltage pulse (Fig. 2) and (Fig. 3). Press the unlock button once.

(2) If no voltage pulse, replace RKE module. If voltage is measured, repair the harness between the receiver and the driver door lock motor.

(3) Check Pin BK–1 of the RKE module connector for quick voltage pulse when the unlock button is pressed twice within a 5 second interval.

(4) If no voltage pulse is measured at Pin 1, replace the RKE module. If voltage is measured

DIAGNOSIS AND TESTING (Continued)

repair the harness between terminal and unlock relay.

DRIVER DOOR WILL NOT LOCK WITH THE TRANSMITTER, BUT OTHER DOORS UNLOCK

(1) With the driver's door in the unlocked position. Using a voltmeter, check Pin BK–3 of the RKE module connector for a voltage pulse (Fig. 2) and (Fig. 3). Depress the unlock button, the voltmeter should read battery voltage for approximately 1 second.

(2) If no voltage pulse is measured, replace the receiver module. If voltage is measured repair harness from RKE module to the driver door motor.

DRIVER DOOR WILL LOCK WITH THE TRANSMITTER, BUT ALL OTHER DOORS WILL NOT UNLOCK

(1) Unlock the driver's door. Using a voltmeter, check Pin BK–1 of the RKE module connector for a voltage pulse (Fig. 2) and (Fig. 3). Press the unlock button twice, within a 5 second interval.

(2) If no voltage pulse is measured, replace the RKE module. If voltage is measured, repair the harness to the unlock relay.

ALL DOORS DO NOT LOCK USING THE TRANSMITTER

(1) Using a voltmeter, check Pin BK–6 of the RKE module connector for a voltage pulse (Fig. 2) and (Fig. 3). Press the lock button on the transmitter. Wait for quick voltage pulse. It may be necessary to press the transmitter several times. The voltage pulse only appears for milliseconds.

(2) If no voltage pulse is measured, replace remote RKE module. If a voltage is measured, repair the harness to the lock relay.

TRUNK LID DOES NOT OPEN WITH THE TRANSMITTER TRUNK RELEASE BUTTON

(1) Check that the latch mechanism works by activating the trunk release switch in the glove box. If the latch does not operate, repair as necessary.

(2) Using a voltmeter, check Pin BK–1 of the RKE module connector for a voltage pulse (Fig. 2) and (Fig. 3). Press the transmitter trunk release button twice in 0.5 to 2.0 seconds.

(3) If no voltage pulse is measured, replace the RKE module. If voltage is measured, repair the harness connection to the trunk release solenoid.

DOORS WILL LOCK USING THE TRANSMITTER BUT THERE IS NO HORN CHIRP

(1) Press horn button, listen horn sound.

(2) If the horn does not CHIRP, check the horn relay and the horn(s). Repair as necessary.

(3) Check and ensure horn chirp cancellation has not been activated.

(4) Using a voltmeter, check Pin BK–7 of the RKE module connector for voltage pulse (Fig. 2) and (Fig. 3). Press the lock button on the transmitter.

(5) If no voltage pulse measured, replace the RKE module. If voltage is measured, repair harness to the horn relay.

UNABLE TO PROGRAM RECEIVER MODULE WITH A NEW TRANSMITTER, DOOR LOCKS WILL NOT CYCLE WHEN THE PROGRAM LINE IS GROUNDED

(1) Using a voltmeter, check Pin BK–8 of the RKE module connector for a battery voltage (Fig. 2) and (Fig. 3).

(2) If no voltage check fuse 13 of the Junction Block, repair as necessary. If OK, go to Step 3.

(3) Check Pin BL–2 of the RKE module connector ignition voltage (Fig. 2) and (Fig. 3).

(4) If no voltage check fuse 14 of the Junction Block, repair as necessary. If OK, go to Step 5.

(5) Using an ohmmeter, check Pin BK–4 of the RKE module connector for ground.

(6) If no ground repair as necessary. The ground is located near the Airbag Control Module (ACM) bracket. If OK, go to Step 7.

(7) Check Pin BK–5 of the RKE module connector for ground. If OK, replace the RKE module. If not OK, repair as necessary.

UNABLE TO PROGRAM RECEIVER MODULE WITH A NEW TRANSMITTER, DOOR LOCKS CYCLE, WITH THE PROGRAM LINE GROUNDED. THE LOCKS WILL NOT CYCLE WHEN THE TRANSMITTER BUTTON IS DEPRESSED.

(1) Check the voltage across each of the 3 Volt batteries in the transmitter. If either or both batteries measure less than 3 Volts, replace the batteries.

(2) If the system still does not work, replace the RKE module and refer to Programing Remote Keyless Entry Transmitter.

SERVICE PROCEDURES

HORN CHIRP CANCELLATION

During the programming operation the horn chirp can be disabled using the following procedures:

(1) Locate the Data Link Connector under the instrument panel right of the steering column.

(2) Turn ignition switch to the ON position.

(3) Ground Pin 1 of the Data Link connector (Fig. 4). This is the programming line for the Remote Keyless Entry Module. The door locks will lock and unlock, to indicate the receiver is ready to receive

SERVICE PROCEDURES (Continued)

transmitter code. The trunk solenoid will not cycle at this time.

(4) Press any button on the transmitter to set code. The locks will cycle to confirm programming. If there is a second transmitter it must be set at this time. Press any button on the second transmitter and wait for the locks to cycle.

(5) Using one of the transmitter, press the transmitter LOCK then UNLOCK buttons. Repeat two more times.

(6) Door locks and trunk release will cycle three times as feedback of Horn Chirp Lockout.

(7) Disconnect the program line from ground. This returns the system to its normal operation mode.

(8) To reinstate the Horn Chirp feature, simply reprogram the module. Refer to Programing Remote Keyless Entry Transmitter

REMOVAL AND INSTALLATION

REMOTE KEYLESS ENTRY MODULE

REMOVAL

(1) Remove instrument panel top cover, refer to Group 8E, Instrument Panel and Systems for proper procedures. The RKE module is mounted to the structural duct on the passenger side.

(2) Remove the two screws attaching the receiver to the instrument panel structural duct (Fig. 3).

(3) Disconnect the two wiring connectors.

(4) Replace module.

INSTALLATION

For installation, reverse the above procedures.

ADJUSTMENTS

PROGRAM REMOTE KEYLESS ENTRY TRANSMITTER

(1) Locate the Data Link Connector under the instrument panel right of the steering column.

(2) Turn ignition switch to the ON position.

(3) Ground Pin 1 of the Data Link connector (Fig. 4). This is the programming line for the Remote Keyless Entry Module. The door locks will lock and unlock, to indicate the receiver is ready to receive transmitter code. The trunk solenoid will not cycle at this time.

(4) Press any button on the transmitter to set code. The locks will cycle to confirm programming. If there is a second transmitter it must be set at this time. Press any button on the second transmitter and wait for the locks to cycle.

(5) Disconnect the program line from ground. This returns the system to its normal operation mode.

(6) Confirm proper system function by actuating the lock, unlock and trunk release buttons on the transmitter.

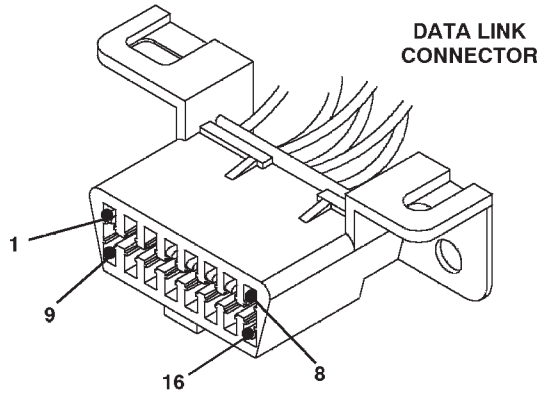

CAV	COLOR	FUNCTION	CAV	COLOR	FUNCTION
1	DG	RKE Module Program Enable	7	PK	SCI Transmit/ISO 9141K
3	VT/BR	CCD Bus (+)	11	WT/BK	CCD Bus (-)
4	BK	Ground	14	PK/LB	SCI Receive(TCM)
5	BK/LG	Ground	16	PK	Fused B(+)
6	LG	SCI Receive			

Fig. 4 Data Link Connector

SPECIFICATIONS

TRANSMITTER BATTERY

The transmitter has two 3 volt batteries, which can be removed and replaced without special tools. The battery is available at local retail stores. Recommended battery is Panasonic CR 2016 or equivalent. Battery life is about two years (Fig. 1).

TRANSMITTER CONTROL RANGE

Operation range is within 7 meters (23 ft.) of the receiver.